BFT spa reserves the rights to change the information hereby contained at any time and without prior notice. Pictures are only indicative and could differ from the received machine for some details.

DATASHEET

EN D813890 2FH03_10 08-06-23

STOPPY B 115/500
STOPPY B 200/700

Automatic electromechanical bollard

Designed to be a simple and reliable bollard, suitable for installations in spaces for collective use (access to private homes, condominiums, hotels, private companies, etc.).
Available in two sizes: Ø115 h. 490 mm, Ø200 h. 700 mm

Actuator reversible, in permanent grease.



STOPPY B 115/500
DIMENSIONS

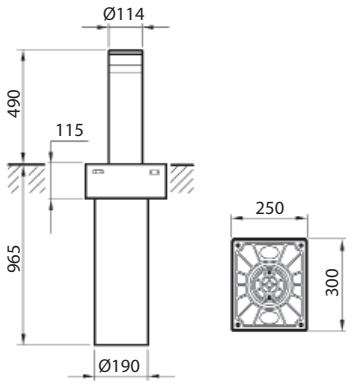

Dimensions in mm

STOPPY B 200/700
DIMENSIONS

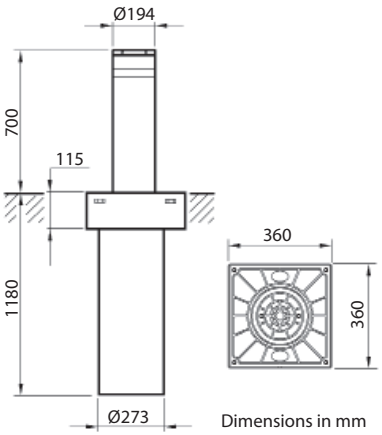

Dimensions in mm

- Automatic electromechanical bollard for semi-intensive use.
- In case of power failure, the stem manually descends.
- Electric parking brake to stem high.
- Limit switches.
- Rod position with magnetic sensor.
- Interfaces for remote control (RS485 - TCP/IP, optional).
- Bollard top cover with led lights and buzzer (only EASY Ø200-700 version).

TECHNICAL SPECIFICATIONS

	STOPPY B 115/500	STOPPY B 200/700
Stem diameter	114 mm	194 mm
Stem height	490 mm	700 mm
Stem thickness	4 mm	6 mm
Rise time	~ 6.0 s (50 Hz)	~ 9.0 s (50 Hz)
Lowering time	~ 6.0 s	~ 9.0 s
EFO rise time	/	
Break-in resistance	60 000 J	110 000 J
Impact resistance	7 000 J	10 000 J
Max operating frequency	up to 500 op./day	
MCBF	400 000 cycles	
Allowable axial static load	Bollard up max 2 500 N; bollard down max 120 000 N	
Emergency unlocking	It lowers manually with power cut-off	
Type of material	Fe 360 (S 235 JR) *	
Treatment	Cataphoresis, standard RAL7015 painting, other colours available upon request	
Weight	57 kg	103 kg
Actuator	Reversible; in permanent grease	
Top cover	Cast iron, cataphoresis black	
Visibility active	/	High intensity LEDs and buzzer, on the top cover
Visibility passive	Reflective white film H=100 mm **	
Flange (included)	Cast iron, cataphoresis black 250 x 300 mm	Cast iron, cataphoresis black 360 x 360 mm
Control unit	PERSEO CBE	
Power supply voltage	1-phase 230 Vac ±10%, 50-60 Hz (115 Vac with optional adapter)	
Motor voltage	230 Vac ±10%, 50-60 Hz	
Power consumption, max (for each bollard)	0.20 kW	
Stopping movement	Electric brake; 24 Vdc - 20 W (sustained 12 Vdc - 5 W)	
Bollard degree of protection	IP67	
Control unit degree of protection	IP55	
Working temperature	-40°C *** +60°C	
Operating humidity	up to 95%, non condensing	
Controllable bollards	Max. 4 for each control unit; parallel control wiring possible for driving many groups of bollards	
Sensors	- Open passage / bollard down - Closed passage / bollard up	
Local/Remote control	- Digital inputs - Radio remote control (transmitter optional)	
Max. n° of remotes that can be memorized	2 048	
Foundation	800 x 800 x h. 1 200mm	800 x 800 x h. 1 400mm

(*) = Option, AISI316
(**) = Customizable (optional)
(***) = With integrated heater active

SAMPLE INSTALLATION

For the system composition and installation please refer to the laws in force in the country where the equipment is installed.

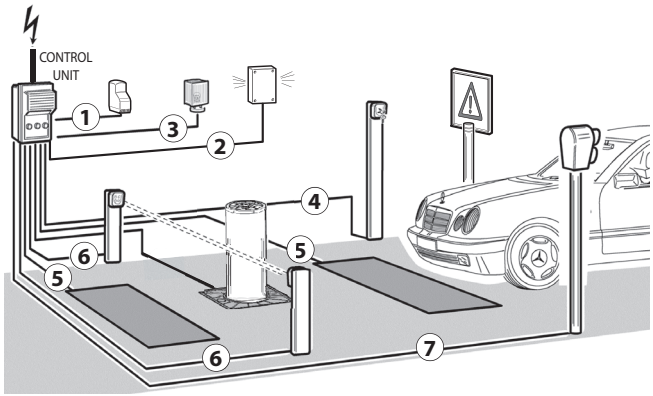

ACCESSORIES

- Anti-tampering sensor
- TCP/IP interface module
- RS485 serial interface module
- Receiver (**1**)
- Switchboard with emergency button
- Emergency vehicle siren detector (**2**)
- Flashing indicator (**3**)
- Key selector (**4**)
- Metal mass detector
- Magnetic coil for metal mass detection (**5**)
- Photocells with steerable infra-red beam (**6**)
- Certified traffic light unit (**7**)

REFERENCE STANDARDS

2014/35/UE (EN 60335-1:2012; EN 60335-1/A11:2014; EN 60335-2-103:2015) Low voltage

2014/30/UE (EN 61000-6-3:2007; EN 61000-6-2:2005; EN 6100-6-3/A1:2011) Electromagnetic Compatibility

2014/53/UE (ETSI EN 301 489-3 + ETSI EN 301 489-1; ETSI EN 300 220-2) Radio Equipment Directive (tested with the electronic control unit PERSEO CBE)

ITEM SPECIFICATION

Electromechanical bollard for semi-intensive use. Steel Fe 360 (S 235 JR), cataphoresis and coating. IP 67. Reflective film H 100mm. Working temperature up to -40°C +60°C. Power absorbed: 0.20 kW for each bollard. Power 230 Vac ±10%, 50-60 Hz. Control unit suitable for controlling a maximum of 4 bollards simultaneously. Electric brake 24 Vdc - 20 W (sustained 12 Vdc - 5 W). With power cut-off lowers manually. Available in two sizes:
- driven rod out of the ground Ø114xh.490xth.4mm; Break-in resistance up to 60 000 J; Working time: ~ 6,0 s rise and lowering time;
- driven rod out of the ground Ø194xh.700xth.6mm; Break-in resistance up to 110 000 J; Working time: ~ 9,0 s rise and lowering time.

Bft Spa
Via Lago di Vico, 44 - 36015 Schio (VI) ITALY
T +39 0445 69 65 11
F +39 0445 69 65 22
info@bft.it
www.bft-automation.com

Be ahead

BFT spa reserves the rights to change the information hereby contained at any time and without prior notice. Pictures are only indicative and could differ from the received machine for some details.