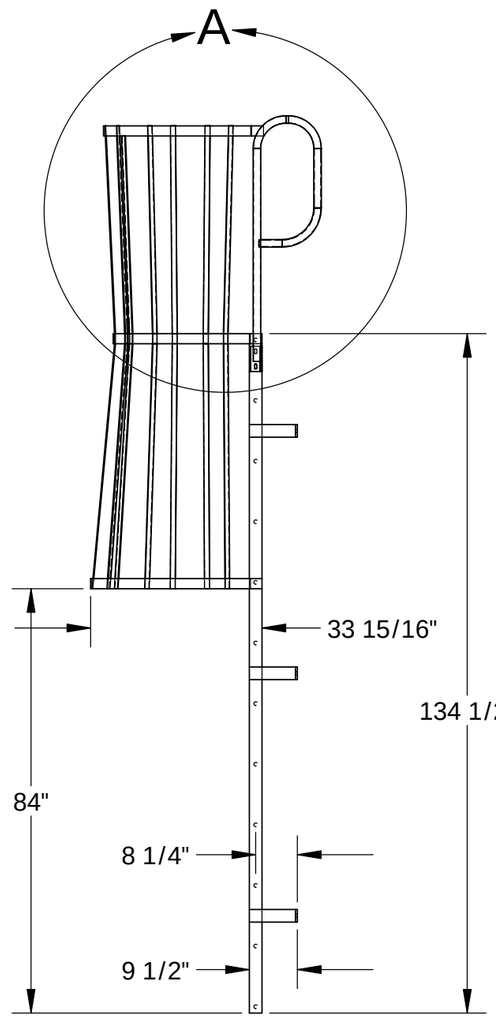

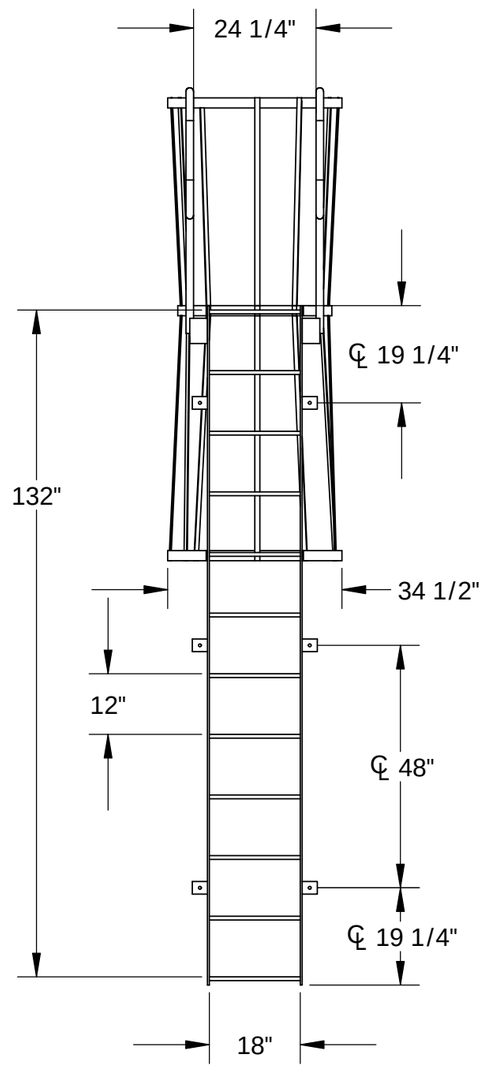

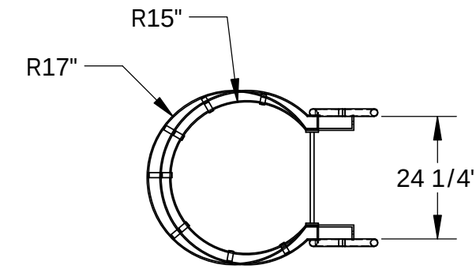

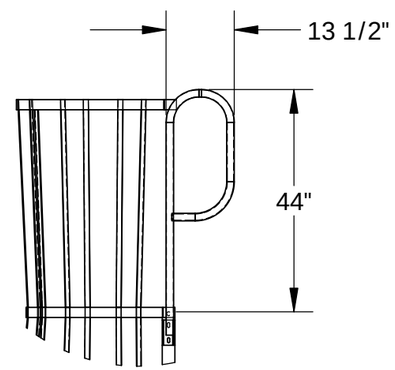

DETAIL A

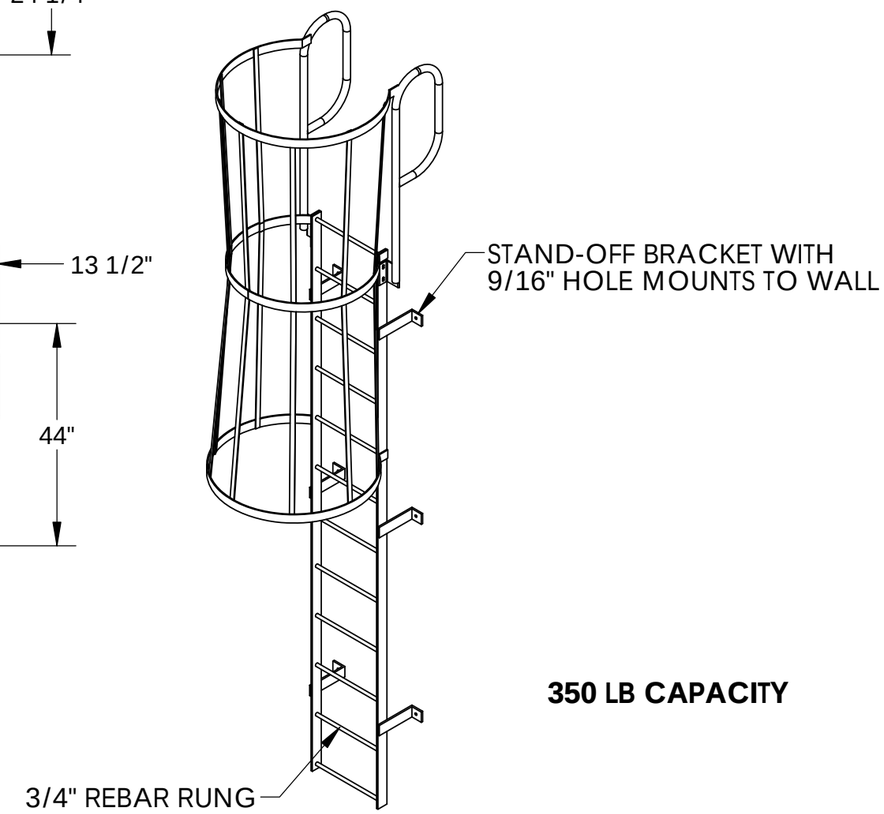

350 LB CAPACITY

Tri-Arc Manufacturing

APPROVAL SIGNATURE:			TITLE: Fixed Ladder with Cage
DATE:			
PROPRIETARY AND CONFIDENTIAL THE INFORMATION CONTAINED IN THIS DRAWING IS THE SOLE PROPERTY OF TRI-ARC MANUFACTURING. ANY REPRODUCTION IN PART OR AS A WHOLE WITHOUT THE WRITTEN PERMISSION OF TRI-ARC MANUFACTURING IS PROHIBITED.	LEAD TIME		
	MATERIAL: Plain Carbon Steel	TRI-ARC MANUFACTURING CO.	SIZE: B / DWG. NO.: WLFC1212 / REV: 01
	FINISH: Gray		
	DO NOT SCALE DRAWING	DRAWN: J.A.L. 7/8/20	SCALE: 1:30 / WEIGHT: 209 / SHEET 1 OF 1