Instruction Manual

Hydraulic Motorcycle Lift

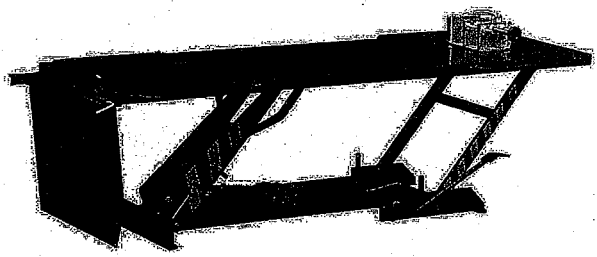

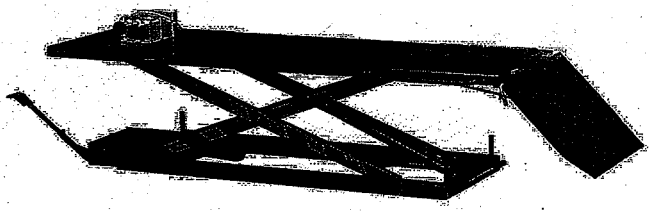

Note: Owner/Operator must read and understand this instruction manual before using the Hydraulic Motorcycle Lift.

47.	Piston	1	74.	Lock nut M10	1
48.	Seal ring	1	75.	Pump body	1
49.	Washer	1	76.	Steel ball Φ7	1
50.	Retaining ring 18	1	77.	O-ring Φ6.9×1.8	1
51.	Retaining ring 12	3	78.	Conical valve	1
52.	Pedal holder	1	79.	Spring	1
53.	Discharge lever	1	80.	Check valve casing	1
54.	Protect casing	1	81.	Rod	1
55.	O-ring Φ10×2.65	1	82.	O-ring Φ10×1.8	1
56.	Spring	1	83.	Check valve screw	1
57.	reflux rod	1	84.	O-ring Φ15×2.65	2
58.	O-ring Φ4×1.8	1	85.	Regulating speed spring	1
59.	Guide casing	1	86.	Regulating speed slide-valve	1
60.	Protect casing	1	87.	Regulating speed spring seat	1
61.	O-ring Φ28×3.1	1	88.	Regulating speed valve casing	1
62.	Pump body for plunger	1	89.	Spring seat assembly	1
63.	Y-ring Φ14×Φ8×6	1	90.	Regulating pressure spring	1
64.	Pump Plunger	1	91.	Regulating pressure nut	1
65.	O-ring Φ18×2.4	2	92.	O-ring Φ7.1×1.8	1
66.	Spring	1	93.	Plug	1
67.	Washer	1	94.	Washer	1
68.	Pin axle	2	95.	O-ring Φ75×2.65	1
69.	Hex socket screw M10×50	1	96.	Oil basin	1
70.	Rock arm	1	97.	O-ring Φ10×2.65	1
71.	Protect casing	1	98.	Plug	1
72.	Pedal holder	1	99.	Washer	1
73.	Washer 10	1	100.	Cylinder	1

SUMMARY

1. Instruction

This instruction manual contains all the instructions for the use of the machine and the necessary knowledge for its correct use. Please read and completely understand this manual before operating the Hydraulic Motorcycle Lift. Always keep this manual at an appropriate place. If the manual or warning decal is missing, please contact with the dealer.

While thanking you for buying our product we would like to draw your attention to some important aspects of this manual.

All the information contained in this instruction manual is based on the data available at the time of printing; the manufacturer reserves the right to modify its products at any time, without notice and without liability.

2. Specification

Model	MC 500	TC 500	TC 150
Max. Capacity (Kg)	500	500	150
Max. Height (Mm)	770	800	1070
Min. Height (Mm)	170	170	145
Platform Size (Mm)	2200X700	2200X700	1400X470
Net Weight (Kg)	193	235	100

3. Safety Instruction

WARNING: If operating the improperly, person maybe injured. Therefore, operate properly according to the following instruction.

LIFT TABLE SPARE PARTS LIST TC150

NO	DESCRIPTION	QTY	NO	DESCRIPTION
1.	Pin axle	2	24.	Pin axle
2.	Guide plate	1	25.	Retaining ring 25
3.	Retaining ring 13	1	26.	Pin axle
4.	Table	1	27.	Hex socket screw M5×8
5.	Fixture	1	28.	Washer 5
6.	Hex screw M8×25	2	29.	Spring
7.	Hex screw M12×20	8	30.	Roller
8.	Washer 12	12	31.	Hex screw M6×20
9.	Pin axle	2	32.	Washer 6
10.	Handle	1	33.	Safety frame
11.	Lock nut M12	2	34.	Chassis
12.	Nut M8	2	35.	Lock nut M6
13.	Hex screw M12×30	2	36.	Pin axle
14.	Hex screw M8×55	2	37.	Hex socket screw M6×30
15.	Washer 8	2	38.	Safety rod
16.	Bushing	2	39.	Seal cover Φ35×Φ43.5×5
17.	Idler pulley	2	40.	O-ring Φ35.5×3.55
18.	Idler pulley base	1	41.	Cylinder cover
19.	Lock nut M8	2	42.	Bushing
20.	Shorter roller	1	43.	O-ring Φ75×3.55
21.	Longer roller	1	44.	Piston rod
22.	Internal scissors	1	45.	O-ring Φ20×2.4
23.	External scissors	1	46.	Guiding δ2×15

7.3 TC150

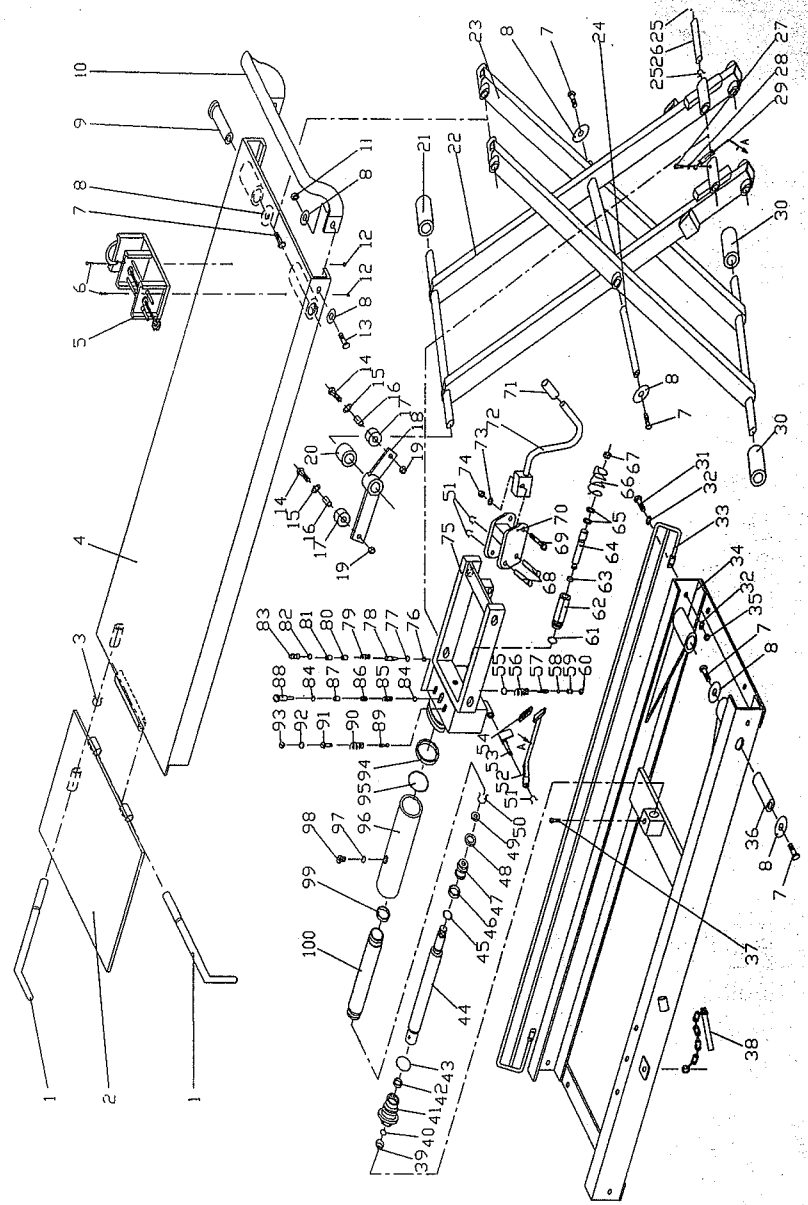

- ◇ Read & thoroughly understand the Instruction Manual completely before using. Follow all safety instructions strictly.
- ◇ It is necessary to check all safety devices before operation.
- ◇ Make sure that there are no obstacles in the working area.
- ◇ Do not put foot or hand in scissors mechanism or through frame.
- ◇ Screw the lifting eyes on the base frame before working on the lift
- ◇ Do not overload the lift. Load should be distributed on the table according to relevant load distribution chart.
- ◇ Connect the accessories to the lifting table according to the drawing. Connecting screws must be tightened.
- ◇ Make sure that local alternating voltage and frequency is consistent in the rated input of lift.
- ◇ Use the lift on flat and solid ground.
- ◇ All of the connection and halt of power supply must be operated by trained personnel.
- ◇ While operating, it is forbidden to touch the moving parts of the lift.
- ◇ While the lift lifting or lowering, it is forbidden to adjust or to move the load.
- ◇ It is forbidden to lift the load, which perhaps will do harm to a person or other object.
- ◇ It is forbidden to operate the lift while a person is under the table.
- ◇ Do not adjust the safety valve of hydraulic power pack.
- ◇ It is forbidden to operate the lift even if there is small structure distortion.
- ◇ Do not use it in an explosive or flammable place.
- ◇ The lift is for the purpose of motorbike maintenance only. Do not use it for other purpose.
- ◇ Do not allow a person to operate the lift, who does not understand its operation.
- ◇ It is forbidden to change the lift without manufacturer's written admission.
- ◇ It is necessary to use the spare parts designated by

manufacturer.

- ◇ Make sure to keep a distance between the table and ambient objects enough to operate the lift safely.
- ◇ Keep the hydraulic system under clean and safe condition.
- ◇ Hydraulic power pack is known as its trait that controlled by low voltage. The error of provided voltage should not excess ±10% to the rated voltage.
- ◇ Always do maintenance and routine check while the lift is unloaded.
- ◇ The lift is not waterproof and should be used in a dry environment.

4. Inspection Before Use

WARNING: Do not use the lift if any malfunction or fault is found.

- ◇ Check all the terms of WARNING and CAUTION.
- ◇ Check the scratch, bending or crack on the lift.
- ◇ Check smooth movement of the table.
- ◇ Check if there is any hydraulic oil leakage.
- ◇ Check the vertical creep of the table.
- ◇ Check if all the bolts and nuts are firmly tightened.

5. Operate the Lift

WARNIING: Do not overload the lift. Ensure the balance of loading. Do not load partially or concentrically.

57.	Washer	1	86	Discharge lever
58.	Union joint	1	87	Link for discharge
59.	Seal ring 18	1	88	Link
60.	Spring	1	89	Split pin 3.2×18
61.	Prevent burse valve	1	90	Retaining ring 12
62.	Retaining ring 20	18	91	Pin axle
63.	Cylinder	1	92	Hex socket screw M6×35
64.	Pin axle for cylinder	2	93	Hex socket screw M6×30
65.	Hex socket screw M8×25	1	94	Pedal for discharge
66.	Spring washer 8	2	95	Spring pin 6×30
67.	Washer	1	96	Tube for discharge
68.	Piston	1	97	Spring
69.	Seal ring Φ45×Φ35×6.4	1	98	Pin axle
70.	O-ring Φ20×2.4	1	99.	Link for lift up
71.	Piston rod	1	100.	Pin axle
72.	Cylinder cover	1	101	Tube for lift up
73.	Seal cover Φ43×Φ35×5	1	102	Link tube
74.	O-ring Φ10.6×2.65	1	103	Hex screw M8×16
75.	Spring	1	104	Washer 8
76.	Reflux rod	1	105	Pedal holder
77.	O-ring Φ4×1.8	1	106	Pin axle for scissors
78.	Guide casing	1	107	External scissors
79.	Protect casing	1	108	Roller
80.	Rubber bush	4	109	Bushing
81.	Bolt	1	110	Internal scissors
82.	Nut M12	1	111	Washer 10
83.	Nylon bush	3	112	Spring washer 10
84.	Chassis	1	113	Hex screw M10×20
85.	Safety rod	1	114	Nut M6

7. Exploded Drawing and Part List

7.1MC500

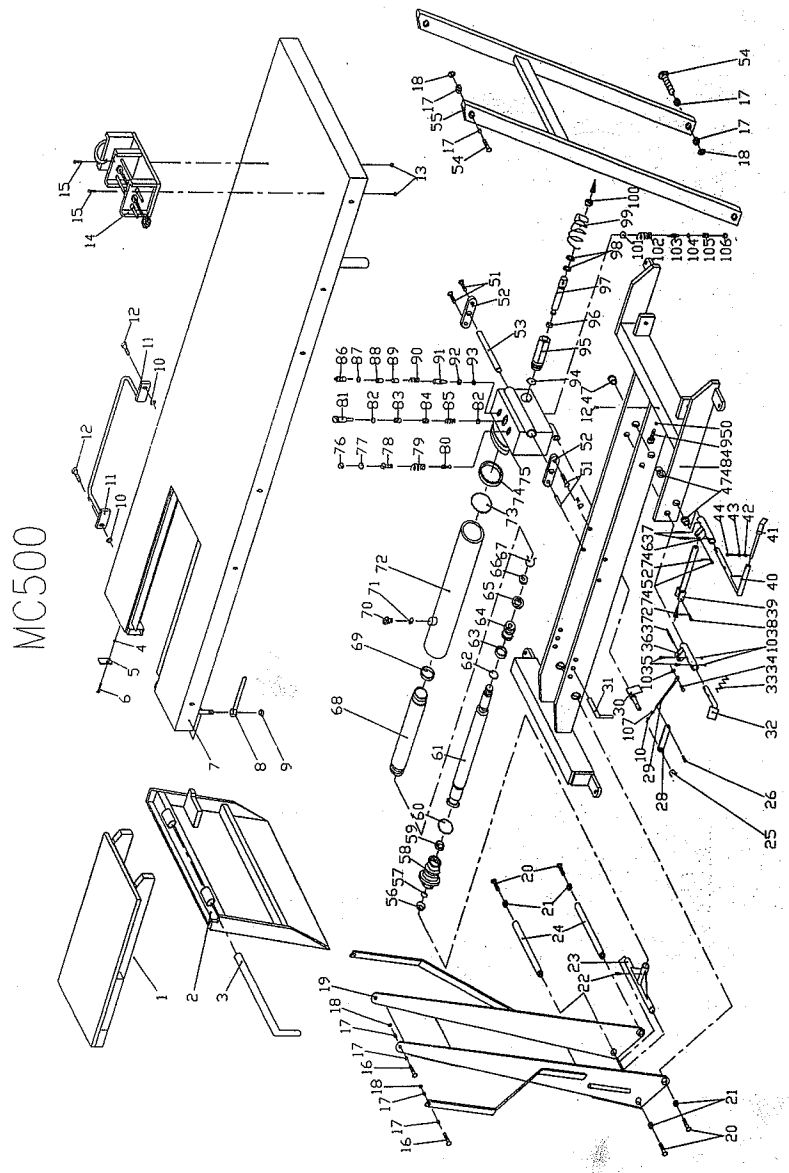

LIFT TABLE SPARE PARTS LIST MC500

NO	DESCRIPTION	QTY	NO	DESCRIPTION	Q
1.	Cover board	1	28.	Link	
2.	Guide plate	1	29.	Link for discharge	
3.	Pin axle	1	30.	Discharge lever	
4.	Lock nut M8	1	31.	Safety rod	
5.	Baffle	1	32.	Pedal for discharge	
6.	Hex screw M8×45	1	33.	Spring	
7.	Table	1	34.	Hex socket screw M6×30	
8.	Support rod	1	35	Hex socket screw M6×35	
9.	Lock nut M18	1	36	Tube for discharge	
10.	Lock nut M6	16	37.	Spring pin 6×30	
11.	Safety frame	6	38	Pin axle	
12.	Hex socket screw M6×18	13	39	Link for lift up	
13.	Nut M8	2	40	Link tube	
14.	Fixture	1	41	Pedal holder	
15.	Hex screw M8×25	2	42.	Washer 8	
16.	Hex screw M12×50	4	43	Spring washer 8	
17.	Washer 12	16	44	Hex screw M8×16	
18.	Lock nut M12	8	45.	Pin axle	
19.	Front support	1	46.	Tube for lift up	
20.	Hex screw M12×20	4	47.	Nylon bush	
21.	Washer 12	4	48	Chassis	
22.	Hex socket screw M8×6	1	49.	Bolt	
23.	Link tube	1	50.	Nut M12	
24.	Pin axle	2	51	Hex screw M12×20	
25.	Retaining ring 12	1	52	Link board	
26.	Pin axle	1	53	Pin axle for pump body	
27.	Split pin 3.2×18	2	54	Hex screw M12×65	

55.	Rear support	1	82	O-ring Φ15×2.65	2
56	Seal cover Φ35×Φ43.5×5	1	83.	Regulating speed spring seat	1
57.	O-ring Φ35.5×3.55	1	84.	Regulating speed slide-valve	1
58.	Cylinder cover	1	85.	Regulating speed spring	1
59.	Bushing	1	86.	Check valve screw	1
60.	O-ring Φ75×3.55	1	87.	O-ring Φ10×1.8	1
61.	Piston rod	1	88.	Rod	1
62.	O-ring Φ20×2.4	1	89.	Check valve casing	1
63.	Guiding δ2×15	1	90.	Spring	1
64.	Piston	1	91.	Conical valve	1
65.	Seal ring	1	92.	O-ring Φ6.9×1.8	1
66.	Washer	1	93.	Steel ball Φ7	1
67	Retaining ring 18	1	94.	O-ring Φ28×3.1	1
68.	Cylinder	1	95.	Pump body for plunger	1
69	Washer	1	96.	Y-ring Φ14×Φ8×6	1
70	Plug	1	97.	Pump Plunger	1
71	O-ring Φ10×2.65	1	98.	O-ring Φ18×2.4	2
72.	Oil basin	1	99.	Spring	1
73.	O-ring Φ75×2.65	1	100.	Washer	1
74.	Washer	1	101.	O-ring Φ10.6×2.65	1
75.	Pump body	1	102.	Spring	1
76.	Plug	1	103.	reflux rod	1
77.	O-ring Φ7.1×1.8	1	104.	O-ring Φ4×1.8	1
78.	Regulating pressure nut	1	105.	Guide casing	1
79	Regulating pressure spring	1	106.	Protect casing	1
80	Spring seat assembly	1	107.	Nut M6	1
81.	Regulating speed valve casing	1			

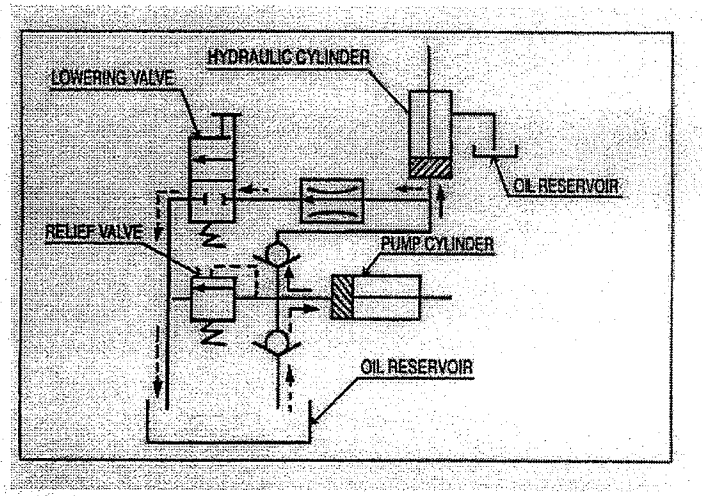

LIFTIN

LOWE

SUCTI

Content	After every 500 hours' working or every 3 months	After every 2000 hours' working or every year
Check oil level of oil tank	/	
Fasten all the connecting parts again	☆	
Check wear and tear of pressure oil pipes	☆	
Check hydraulic cylinder	☆	
Fix main parts tightly again	☆	
Check whole working state of the lift	☆	
Lubricate all the joints and pivot points	☆	
Check wear and tear of all axial bushes		☆
Replace hydraulic oil		☆
Check oil leaking		☆
Remark: *☆ stands for proceeding the item.*		

LIFT TABLE SPARE PARTS LIST TC500

NO	DESCRIPTION	QTY	NO	DESCRIPTION	QTY
1.	Cover board	1	29.	Washer	1
2.	Guide plate	1	30.	Plug	1
3.	Pin axle	1	31.	O-ring Φ7.1×1.8	1
4.	Lock nut M8	2	32.	Regulating pressure nut	1
5.	Baffle	1	33.	Regulating pressure spring	1
6.	Hex screw M8×45	1	34.	Spring set assembly	1
7.	Table	1	35.	Regulating speed valve casing	1
8.	Support rod	1	36.	O-ring Φ15×2.65	2
9.	Lock nut M18	1	37.	Regulating speed spring set	1
10.	Lock nut M6	16	38.	Regulating speed slide-valve	1
11.	Rod	1	39.	Regulating speed spring	1
12.	Roller	1	40.	Check valve screw	1
13.	Hex socket screw M6×25	1	41.	O-ring Φ10×1.8	1
14.	Hex screw M8×50	1	42.	Rod	1
15.	Hex socket screw M6×20	13	43.	Check valve casing	1
16.	Safety frame	6	44.	Check valve spring	1
17.	Nut M8	2	45.	Conical valve	1
18.	Fixture	1	46.	O-ring Φ6.9×1.8	1
19.	Hex screw M8×25	2	47.	Steel ball Φ7	1
20.	Joint	2	48.	Hex screw M12×20	4
21.	Seal ring 14	5	49.	Washer 12	4
22.	High pressure hose	1	50.	Pump body	1
23.	Nut	1	51.	O-ring Φ28×3.1	1
24.	Bolt	1	52.	Pump body for plunger	1
25.	Oil basin	1	53.	Y-ring Φ14×Φ8×6	1
26.	Plug	1	54.	Pump plunger	1
27.	O-ring Φ10×2.65	1	55.	O-ring Φ18×2.4	2
28.	O-ring Φ75×2.65	1	56.	Spring	1

5.1 Loading a Motorbike

◇ Passing through the guiding plate, the motorbike shall be placed stable and reliable.

◇ Lock the front wheel of the motorbike with special accessory.

5.2 Lifting the Lift

◇ Step the "up" pedal by foot to lift the platform to a proper level.

◇ Plug the safety lever into safety hole and assure the security.

◇ During the maintenance, to prevent the motorbike from tilting over, no severe motion should occur.

5.3 Lowering the Lift

◇ Do not stretch your hands or feet under the scissor.

◇ Pull out the safety lever and fix it in original position.

NOTE: If the safety lever can't be pulled out, step the "UP" pedal a little and it will be pulled out.

◇ Step the "DOWN" pedal by foot, the platform will lower down.

6. Maintenance

◇ Before maintenance, lift the platform to proper level and insert the safety level.

◇ Do routine check of fasteners, packing and oil leaking.

◇ Do routine check of the function of the lift.

◇ Before maintaining the lift, make sure to turn off the AC

◇ Power supply.

◇ It is necessary to check the function of the lift again after the maintenance.

◇ ONLY a qualified personnel can do service work.

◇ Do routine check of the micro-switches on the safety guard.

◇ Do routine check of hydraulic system by listen the noise of hydraulic system and contact the surface of electromotor.

NOTE: Be sure to cut off the power before contact the electromotor.

◇ After a long time service, pay attention to replace the hydraulic oil.

◇ Appropriate lubrication is necessary to make the lift work easily and have a prolonged service life.

MC500

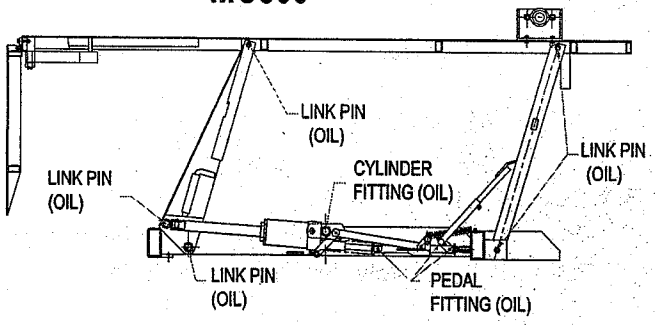

TC500

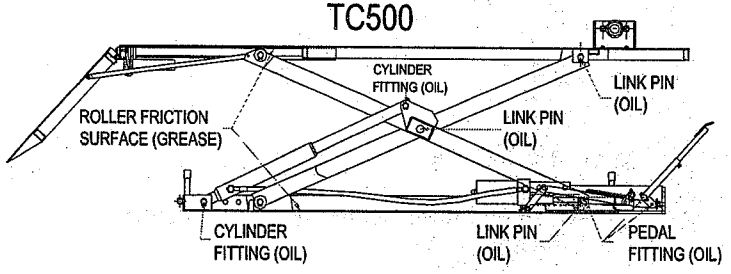

TC150

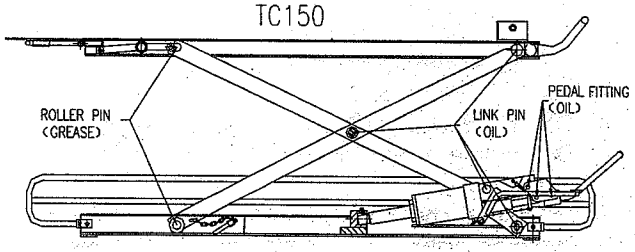

7.2 TC500