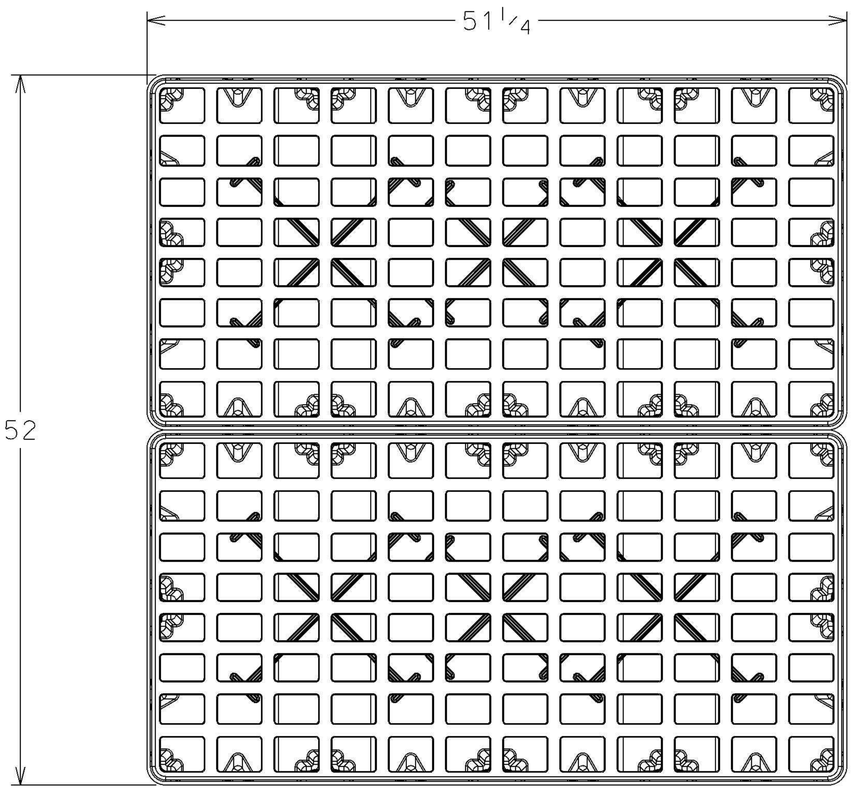

TOP VIEW

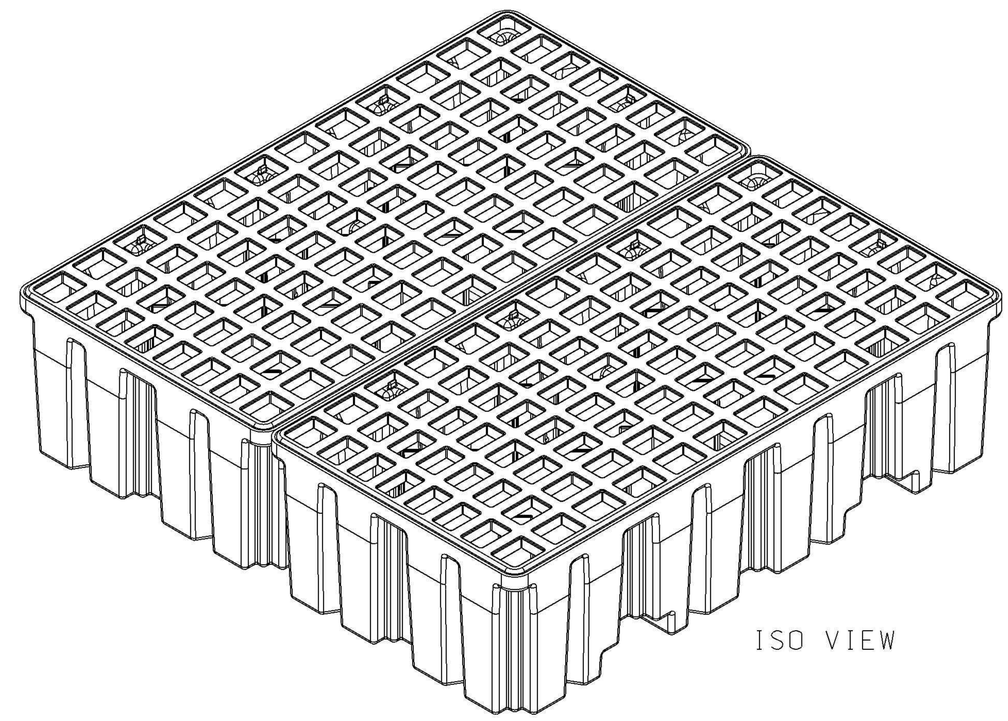

ISO VIEW

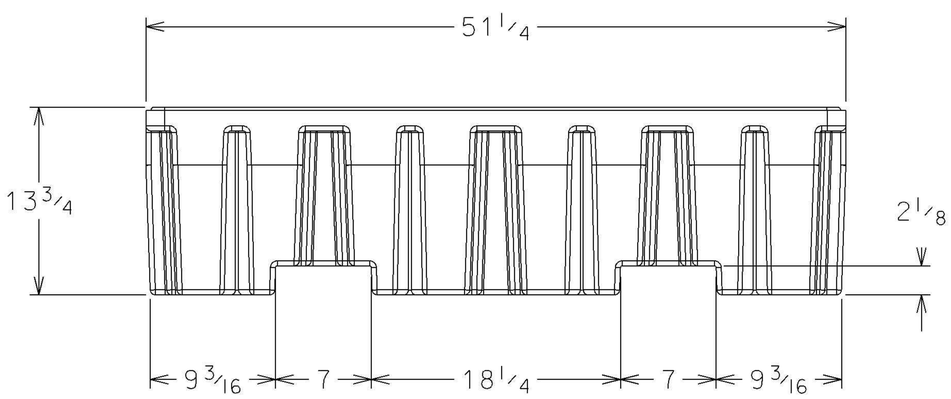

FRONT VIEW

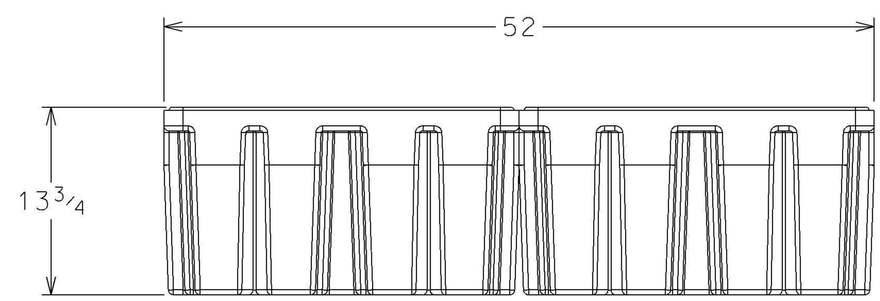

RIGHT VIEW

THIS DRAWING AND THE INFORMATION IT CONTAINS ARE THE PROPERTY OF EAGLE MANUFACTURING COMPANY AND MAY NOT BE USED OR REPRODUCED WITHOUT THE EXPRESS WRITTEN PERMISSION OF THE COMPANY.

EAGLE	1640 SPILL PALLET		
	STRUCTURAL FOAM TUB WITH GRATING DETAILS		
DRAWN: 10/13/10 BY D.J.M.	SIZE D	DWG NO. PD-1011	REV.
ISSUED:	SCALE .1875"=1"	REVISION DATE:	