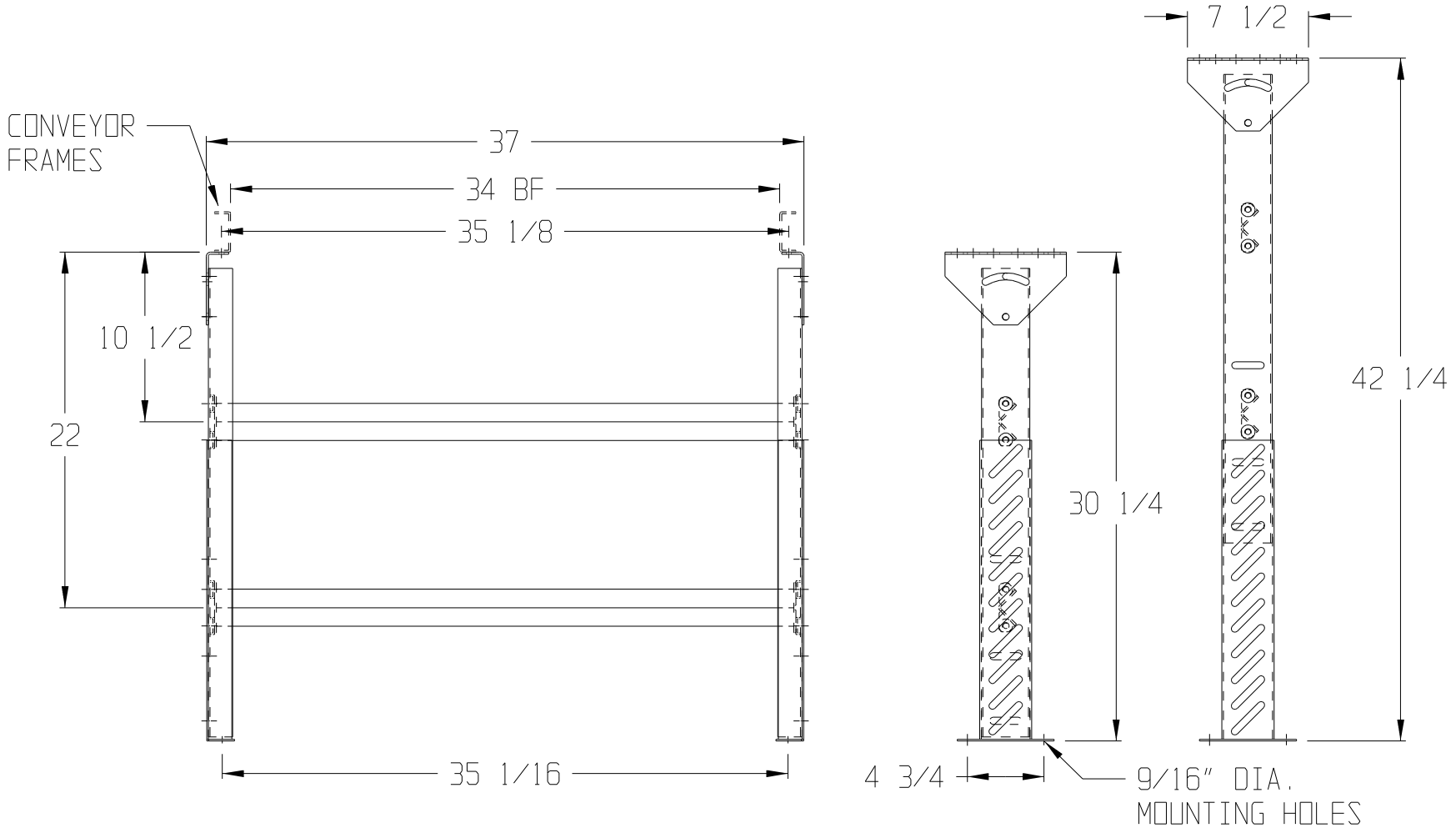

NOTES:
- 3 x 1-1/2 x 12 GA. GALV. UPRIGHTS

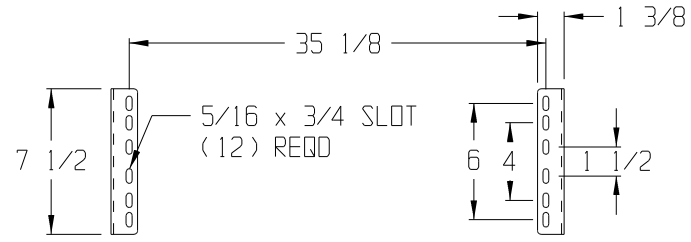

TOP VIEW
PIVOT BRACKETS

OmniMetalcraft corp.
ALPENA, MI U.S.A.
(989) 358-7000

TITLE LHST34-30.25-42.25

DRAWN BY	JOB	DRAWING NO.
DATE	DRAWING SIZE AH	
SCALE 3/32"=1"		