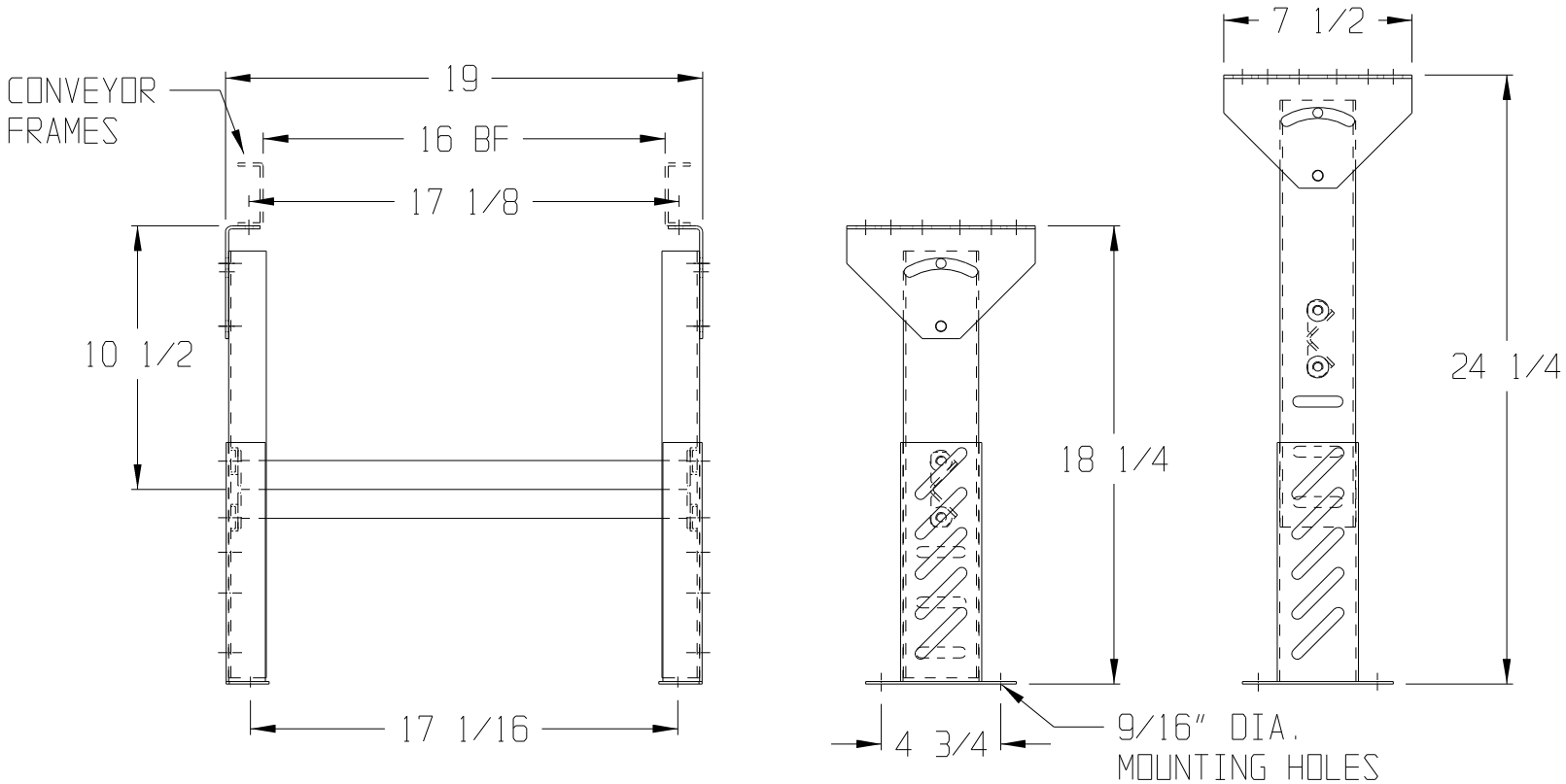

NOTES:
- 3 x 1-1/2 x 12 GA. GALV. UPRIGHTS

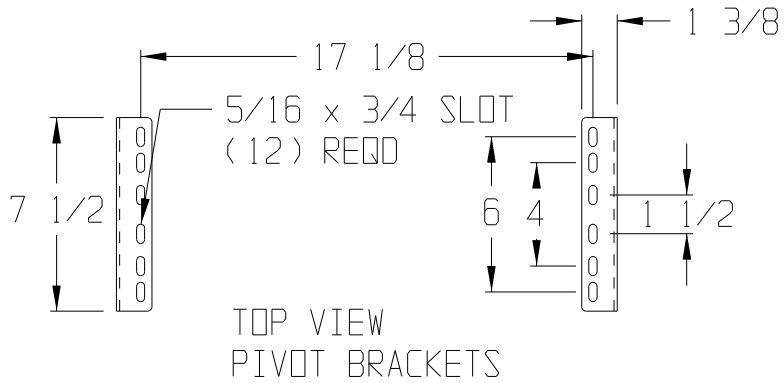

OmniMetalcraft corp.
ALPENA, MI U.S.A.
(989) 358-7000

TITLE LHST16-18.25-24.25

DRAWN BY	JOB	DRAWING NO.
DATE	DRAWING SIZE AH	
SCALE 1/8"=1"		