Bench Scale Installation Guide

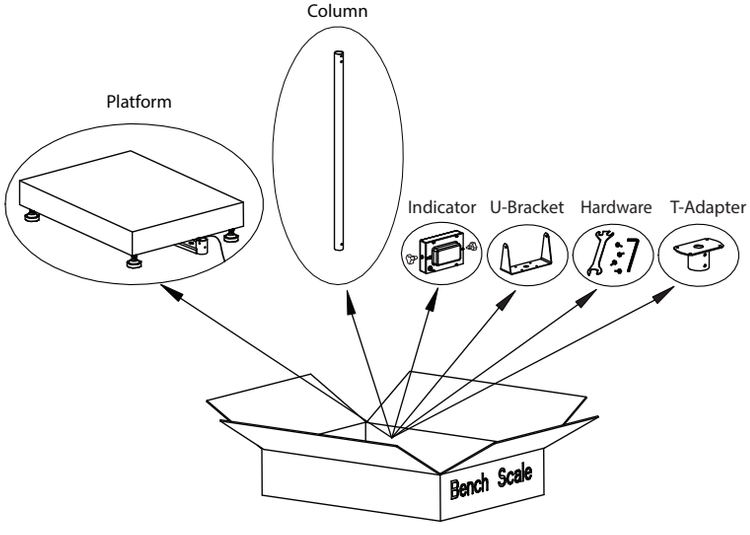

Lift tray, and remove the four yellow rubber frame protectors tags

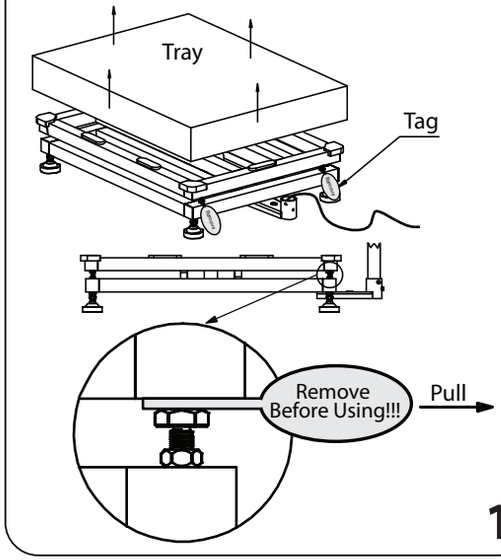

1

Carefully, without tugging, run the cable through the column and assemble column to base

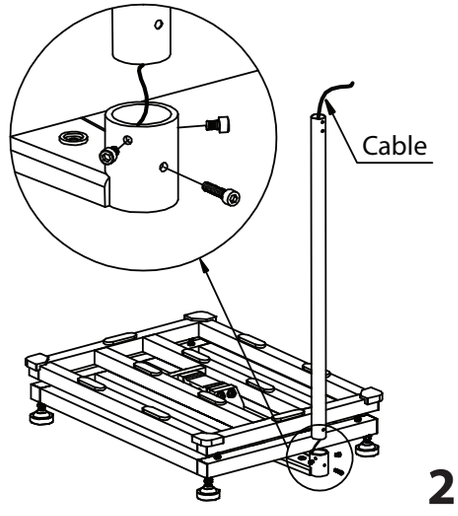

2

Assemble T-Adapter and U-bracket as shown below

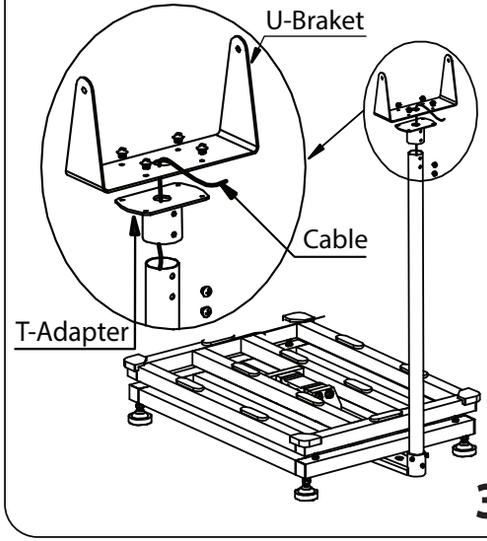

3

Install indicator to U bracket with 2 knobs and connect the cable to the indicator interface port

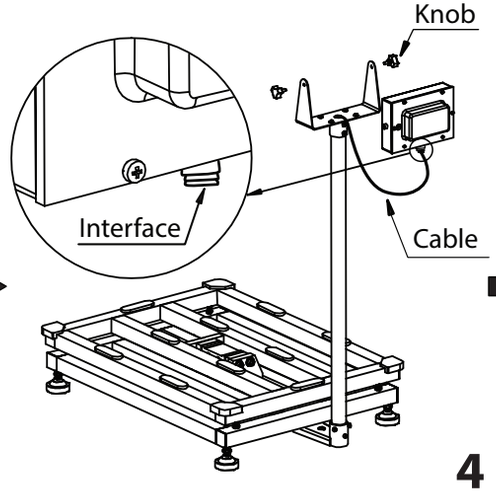

4

Place the tray on the scale frame; Use level bubble to level the scale by adjusting the feet

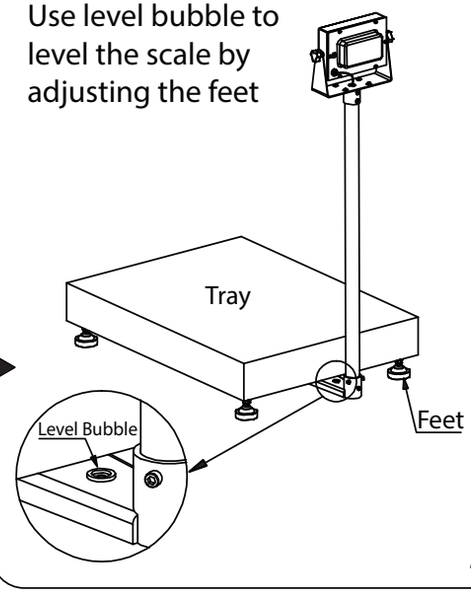

5

Model no. 412663, 412664, 412665, 412666, 412667